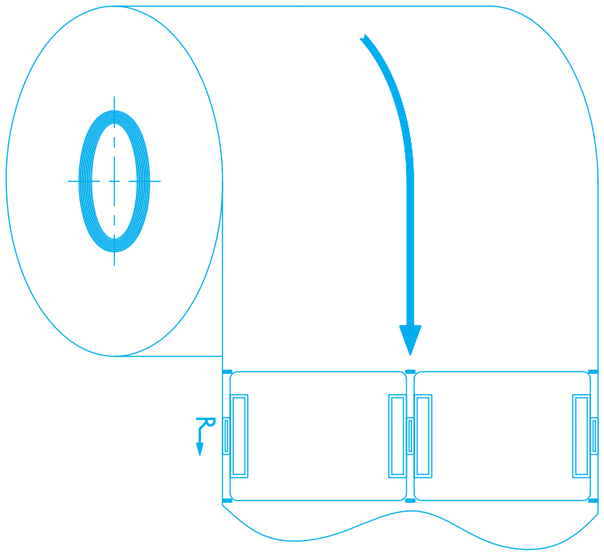

View of the Web layout viewed from the lidding foil side
Scale 1:4

LEGEND	
DETAIL	DESCRIPTION
	Photo registration Mark @ 6.00mm x 2.00mm
	Read direction
	Quiet zone, Print and graphics free
	Area reserved for PCI Part number, Printed in OCR-B Font
	Area reserved for **pre-printed** V/Data. NOTE Inspected data must not print over a perforation

Material 1 Specification:	Material 2 Specification:

Product 1 Details:	Product 2 Details:

Associated Drawing: 718500340e	Associated Drawing: 718500342f
Baraclude 1.0mg x 10's count	baraclude 0.5mg x 10's count

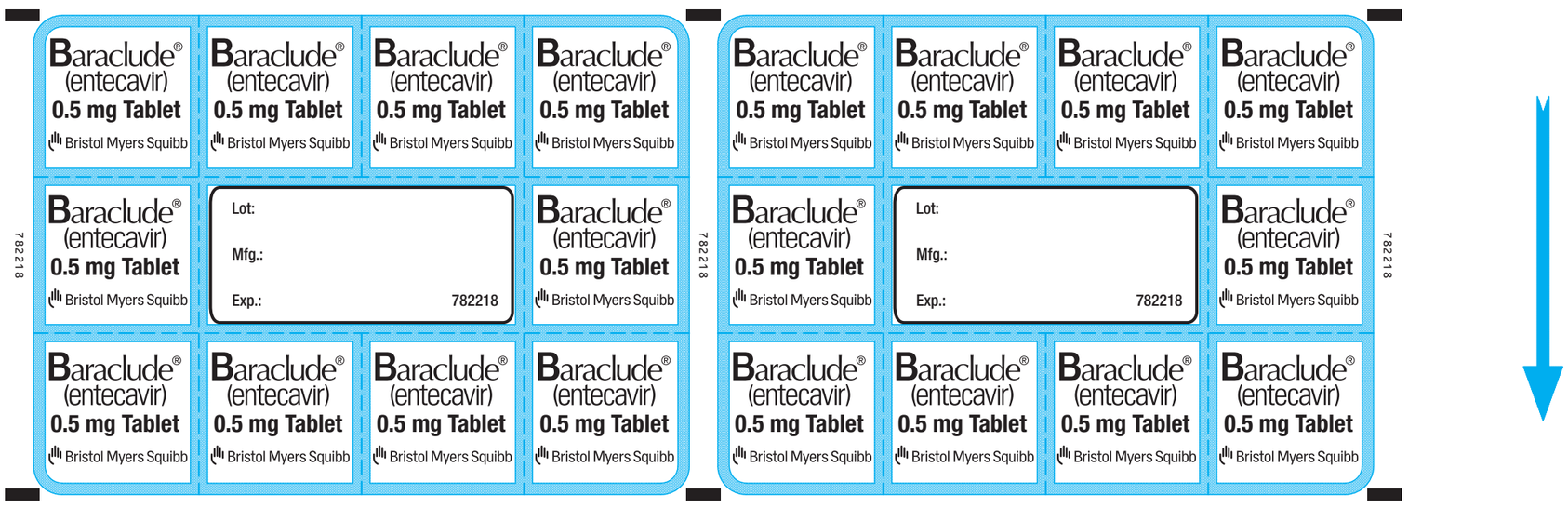

BMS Technical Information Panel

Artwork Template (DIR) #: 10000377306 Vs 00
Artwork Template Description: PTGPLT AWTMPL-115x84x245-C007-00011-PCIIE
Specification ID #: 410000021353
CMO Name: PCI IRELAND **CMO Drawing #:** C007-00011-B **Date:** 12 Sep 2023 /d03

Note: Varnish should always cover the variable data prefixes

Bristol Myers Squibb

MS&T Artwork: Dublin
BAMS Artwork Number: PRD-009642-1
Version: 01
Trade Name: Baraclude
Component: Foil
Market(s): Malaysia

Print Swatches:
PMS Process Black

Non-Print Swatches:
Profile
Technical Info

Confidentiality agreement: Artwork may not be altered in any way without express permission from MS&T Artwork

Bar prints 100mm @ 100%

MS&T Artwork Dublin

Date: 22 Jul 2025 **Time:** 14:56
Superseded Artwork Number: N/A
CMO Artwork Number: 782218
CMO Drawing: C007-00011-B
BMS Template: 10000377306
OLV Barcode Type/Value: Item Code = N/A
SITE/CMO: PCI IRELAND
CMO Description: FOI Baraclude 0.5MG (3BLPX10) MY

Font Information

Font Family: Helvetica Neue LT Pro
Body text size: 12pt
Smallest text size: 8pt (Excluding artwork code)

Perigord