The batch No. and Expiry date will be printed at the back of label

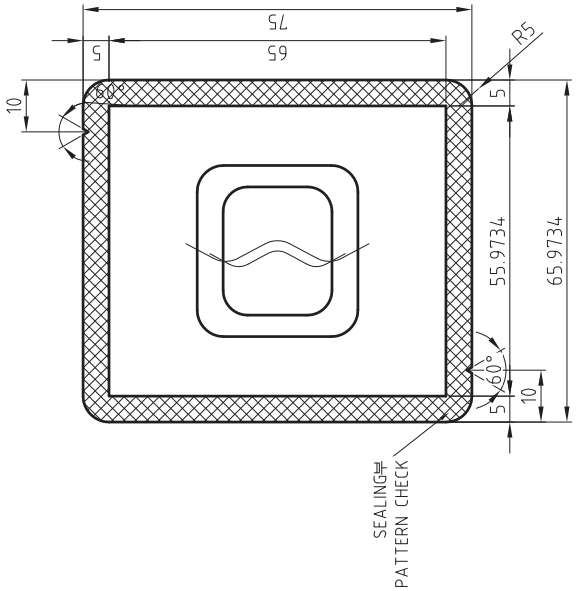

Cut open pouch

Transdermal Patch

Rivacure Patch 5

(Rivastigmine 4.6 mg/24 hours)

[Composition] Rivacure Patch 5
Rivastigmine..... 9 mg
[Appearance, Indication, Dosage, Precaution]
Refer to package leaflet.

Store at below 30 °C
Keep out of reach of children.
Jauhi dari kanak-kanak.

Keep pack in sachet until use

[Manufacturer] : ICURE Pharmaceutical Inc
13, Je3gongdan 3-gil, Seoun-myeon, Anseong-si, Gyeonggi-do,
Republic of Korea

[Product Registration Holder]: Sun Pharmaceutical Sdn Bhd
25-11, level 25, Q-Sentral, Jalan Stesen Sentral 2, Kuala Lumpur Sentral,
50470 Kuala Lumpur, Malaysia

UBAT TERKAWAL
CONTROLLED MEDICINE

***1* Piece**

Cut open pouch

LOT.

MFG.

EXP.

REG. No.