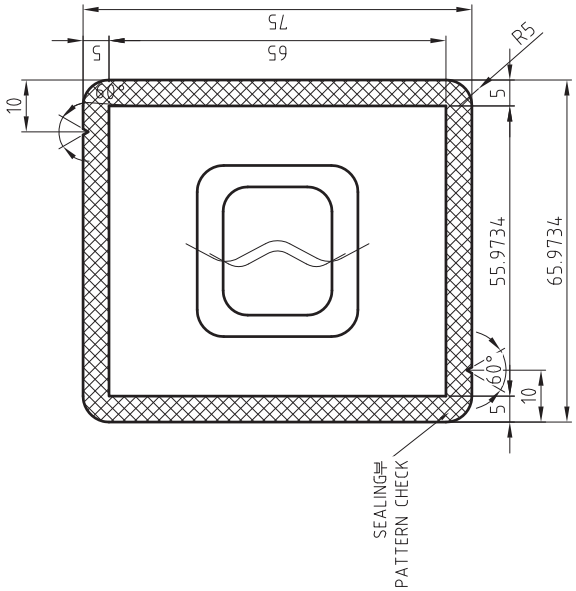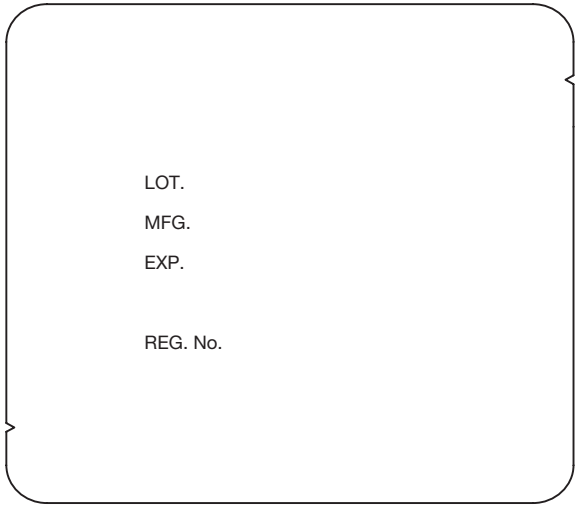The batch No. and Expiry date will be printed at the back of label