Title: Winderm Cream 1%w/w - 10g Tube (FEO) Date: 23-2-2018

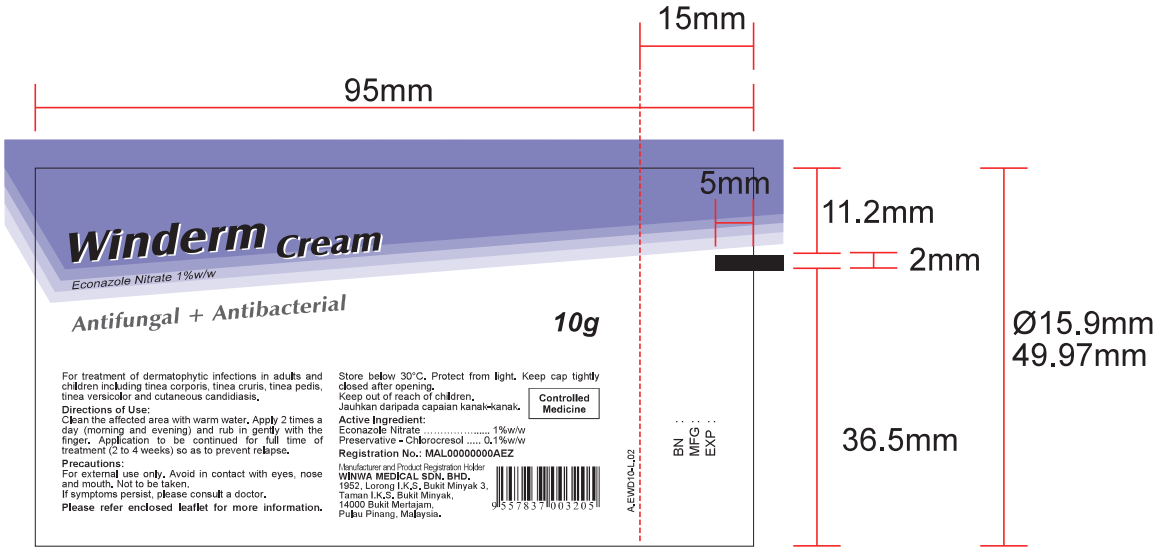

Size: 95mm x 50mm

Pantone 2655C Pantone 431C K