ORION PHARMA

Artwork created 25.01.2024/AG

Carton:
Size: 82x39x122mm
Construction: K11
Material: Fully coated folding boxboard
Thickness: 500 micr.

Braille: N/A

Codes:
Pharmacode
EAN

Colors:
Cyan
Magenta
Yellow
Black

Number of colors: 4
Varnish: partial

Special requirements:

SAP number:
XXXXXX-X

Fonts and size :

ScalaSansLF-Regular
ScalaSansLF-Bold
Min 7.5 pt

Braille 1cm Dutch 28,35pt
Pharmacode-O 36pt

Non print colors:

Die cut:
cut
crease
No color or varnish
Braille

Approved for printing by/date:

ORION PHARMA
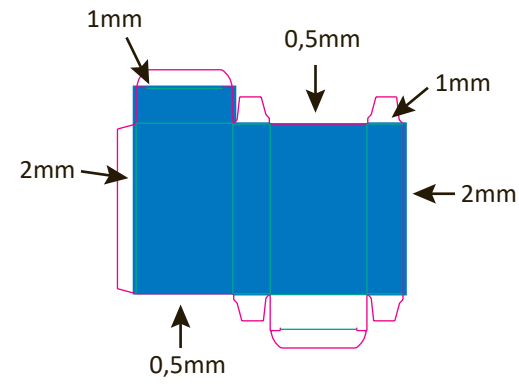
Bleed for carton: