ORION PHARMA

Artwork created 19.10.2020 / JT 383564 / Marianne

Carton:
Size: 55x55x102mm
Construction: K11Glued
Material: Fully coated folding boxboard
Thickness: 500 micr.

Braille: -

Codes:
Pharmacode -

Colors:
Black
PMS 1635
PMS 3252
PMS 5747

Number of colors: 4
Varnish: partial

Special requirements:

SAP number:
157246-1

Fonts and size:

Braille 1cm Dutch 28,35pt
Pharmacode-O 36pt

Non print colors:
Die cut:
cut
crease
Perforation
No color or varnish
Braille

ORION PHARMA
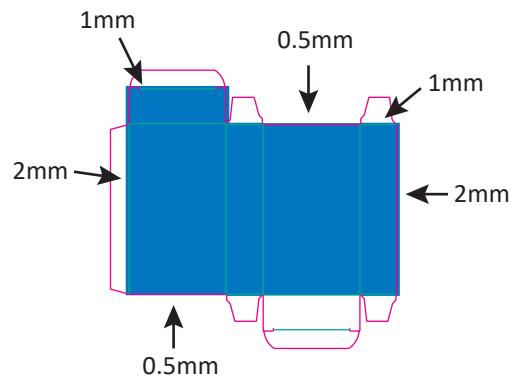
Bleed for carton: