Un Varnished Area for Coding

B. No.
MFG.
EXP.

150101566
37 x 35 x 70 mm

Code No.: DRUGS/AP/3/2014
M.L. No.: 3/VP/AP/2014/F/R

Reg No.: MAL24056085AZ

GTIN: 08901148271371

Product Registration Holder
Dr. Reddy`s Laboratories
Malaysia Sdn. Bhd.
UNIT NO. SO-29-07 AND SO-29-08,
MENARA 1, STRATA OFFICE, NO. 3,
JALAN BANGSAR, KL ECO CITY,
59200 KUALA LUMPUR MALAYSIA

8 901148 271371

Dr.Reddy's

Ubat Terkawal/
Controlled Medicine

FOSEMRED

Fosaprepitant Powder
for Solution for Infusion

Intravenous use

Single-Use vial **150** mg/vial

Each Lyophilized Vial contains:
Fosaprepitant dimeglumine 245.3mg equivalent to Fosaprepitant 150mg.

For single use only. Discard any residue.

Read the package leaflet before use

Keep medicine out of reach of children/Jauhi ubat daripada capaian kanak-kanak

Unopened Vial: Store in a refrigerator at 2°C – 8°C.
The reconstituted final drug solution is stable for 24 hours at ambient room temperature [at or below 25°C].

Manufactured by:
DR. REDDY'S LABORATORIES LIMITED,
FTO-IX, Plot Nos Q1 to Q5, Phase- III,
VSEZ, Duvvada,
Visakhapatnam - 530046,
Andhra Pradesh, India.

PC 3134

Dr.Reddy's

Ubat Terkawal/
Controlled Medicine

FOSEMRED

Fosaprepitant Powder
for Solution for Infusion

Intravenous use

Single-Use vial **150** mg/vial

Unvarnished Area for Pasting

FOSEMRED

Fosaprepitant Powder
for Solution for Infusion

150 mg

SS ARTS Graphic Designers

Version No: 00

Date: 17.02.2025

Change History:
New Artwork (27.01.2025)
Corrections Done (29.01.2025)
Corrections Done (17.02.2025)

PANTONE CODES	
	2091 C
	Black C
	158 C
	Unvarnished Area Not to be Printed

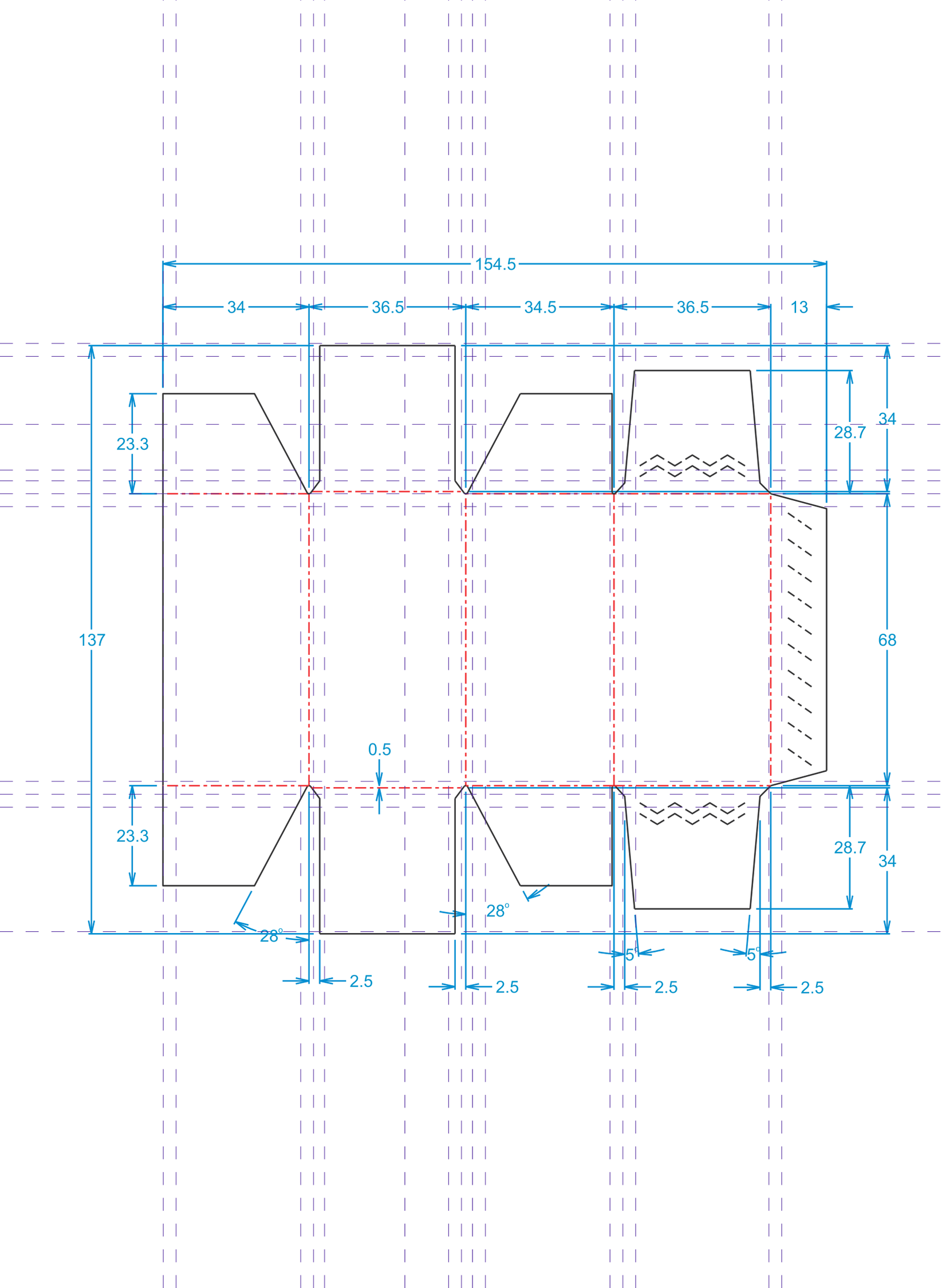
154.5
34
36.5
34.5
36.5
13
137
23.3
28.7
34
68
0.5
23.3
28.7
34
28°
28°
5°
5°
2.5
2.5
2.5
2.5